■ High Power High-Q MLCC

High power high-Q MLCC for General-use is class I high frequency capacitor.。

Features

- ∗ The dielectric is composed of low dielectric loss ceramics. This series is perfectly suited to high-frequency applications (VHS-microwave band).。
- ∗ It has multi-layer monolithic structure, has high reliability.
- ∗ It has good solderability and soldering resistance, suitable for flow soldering/ reflow soldering.

• Applications

It is suitable for high-frequency and high power circuits. Can be applied for ultra-high frequency RF circuits and Hi-Q,low ESR, high frequency response microwave circuits.

• Product Part Number Expression

1206	CG	100	J	500	N	T
①	②	③	④	⑤	⑥	⑦

①Dimensions		
Type	British (Inch)	Metric (mm)
1206	0.12×0.06	3.2×1.6
1812	0.18×0.12	4.5×3.2
2225	0.22×0.25	5.7×6.3

②Dielectric Type
Code
CG

③Normal Capacitance(PF)	
Expression Method	Actual Value
100	10×10^{0}
101	10×10^{1}
102	10×10^{2}

④Capacitance Tolerance	
Code	Tolerance
J	±5%
K	±10%

⑤Rated Voltage	
Expression Method	Actual Value
6R3	6.3V
500	50V
101	100V

⑥Termination Type	
Expression Method	Termination Material
S	Pure Silver
C	Pure Copper
N	Three Layers Plating Terminal (Silver or Copper layer/ Nickel layer /Tin layer)

⑦Package Method	
Expression Method	Packaging
No Mark	Bulk Packaging in a Bag
T	Taping Packaging
B	Bulk Plastic Box Packaging

• Outside Dimension

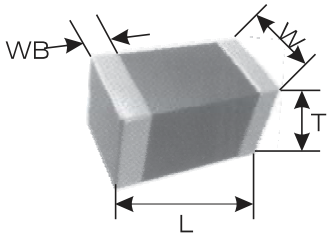

Type		Dimension（mm）			
British expression	Metric expression	L	W	T	WB
1206	3216	3.20±0.30	1.60±0.20	0.80±0.10 1.00±0.10 1.25±0.10	0.50±0.25
1812	4532	4.50±0.40	3.20±0.30	≤2.5	0.50±0.10
2225	5763	5.70±0.50	6.30±0.50	≤2.5	1.0±0.25

- Capacitance Range

Item	High-Q MLCC for General-use										High Power High-Q MLCC					
Dielectric Size	CF				CQ						CQ					
Demension	0603		0805		0402		0603		0805		1206		1812		2225	
Rated Volatage	25V	50V	25V	50V	25V	50V	25V	50V	25V	50V	25V	50V	25V	50V	25V	50V
Capacitance																
0.5PF																
1PF																
2PF																
3PF																
4PF																
5PF																
6PF																
7PF																
8PF																
10PF																
15PF																
18PF																
22PF																
33PF																
39PF																
47PF																
51PF																
56PF																
62PF																
68PF																
75PF																
82PF																
91PF																
100PF																
120PF																
150PF																
180PF																
220PF																
330PF																
470PF																
560PF																
680PF																
820PF																
1000PF																
1200PF																

■ Package

- Paper Tape Taping

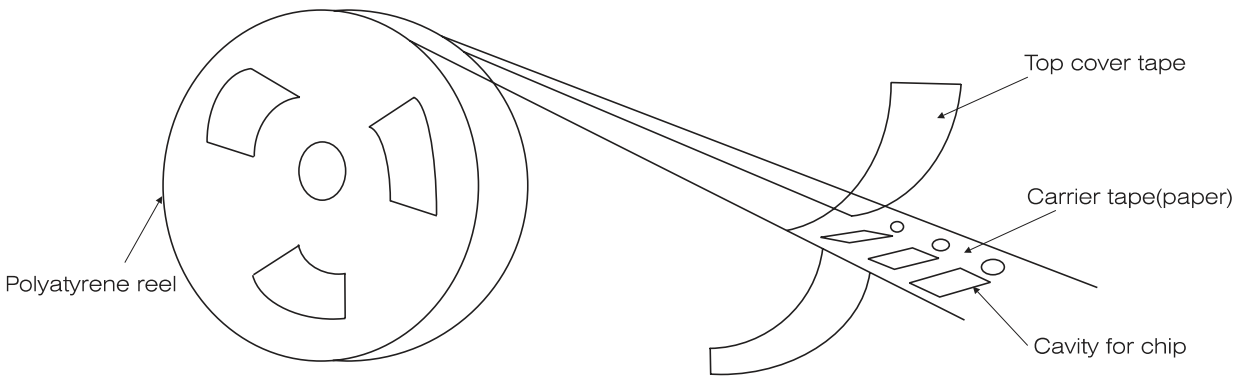

※Dimensions of paper take taping for0402,0603，0805，1206

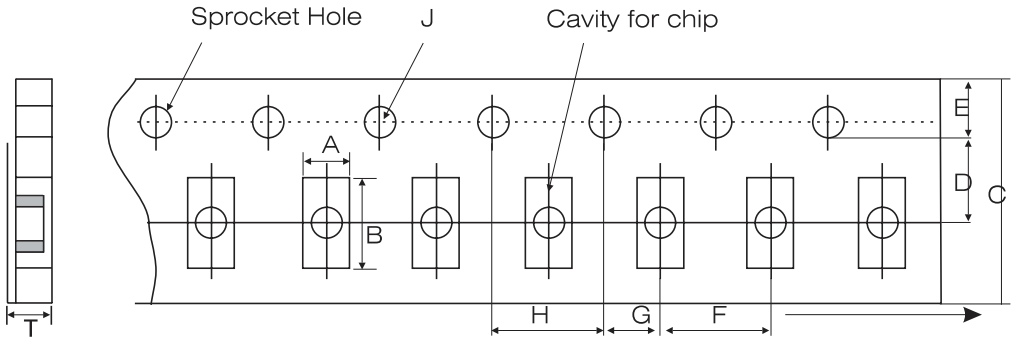

Code / Paper size	A	B	C	D	E	F	G	H	J	T*
0402	0.65 ±0.10	1.15 ±0.10	8.00 ±0.10	3.50 ±0.05	1.75 ±0.10	2.00 ±0.05	2.00 ±0.05	4.00 ±0.10	1.50-0/ +0.10	Below 0.80
0603	1.10 ±0.20	1.90 ±0.20	8.00 ±0.20	3.50 ±0.05	1.75 ±0.10	4.00 ±0.10	2.00 ±0.10	4.00 ±0.10	1.50-0/ +0.10	Below 1.10
0805	1.45 ±0.20	2.30 ±0.20	8.00 ±0.20	3.50 ±0.05	1.75 ±0.10	4.00 ±0.10	2.00 ±0.10	4.00 ±0.10	1.50-0/ +0.10	Below 1.10
1206	1.80 ±0.20	3.40 ±0.20	8.00 ±0.20	3.50 ±0.05	1.75 ±0.10	4.00 ±0.10	2.00 ±0.10	4.00 ±0.10	1.50-0/ +0.10	Below 1.10

- Embossed Taping

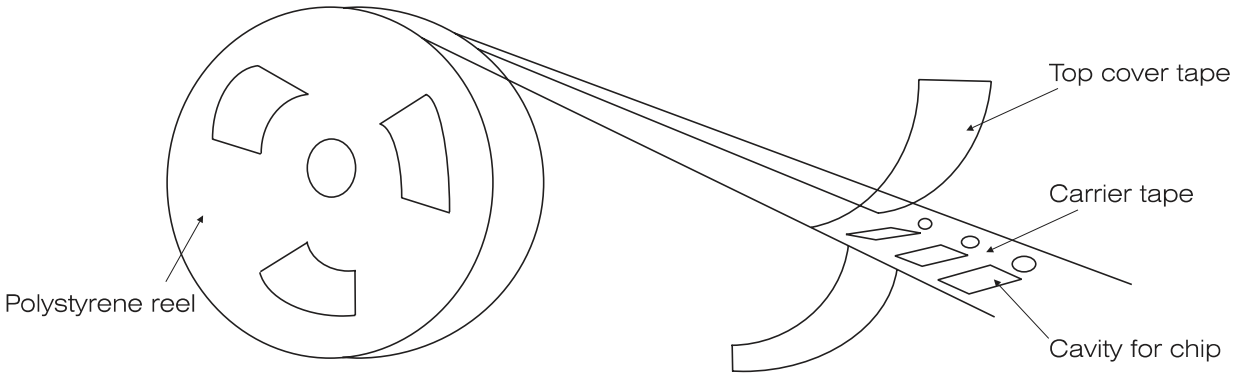

※Dimensions of embossed taping for 0805, 1206, 1210, 1808, 1812 type

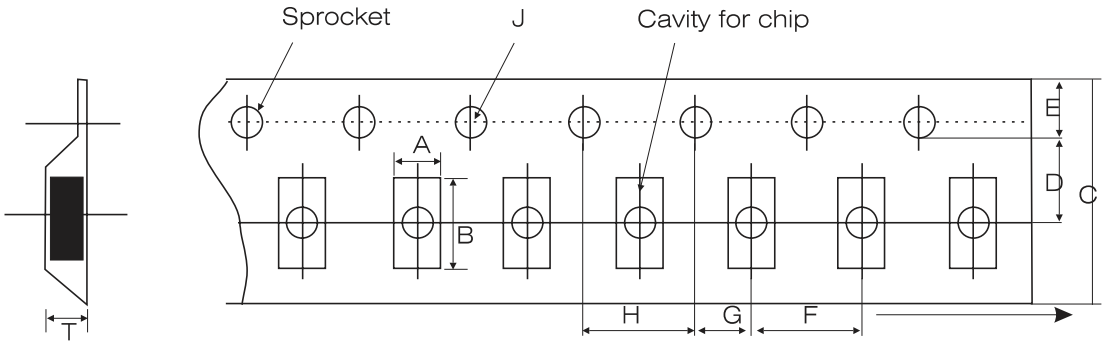

Code / Tape size	A	B	C	D	E	F*	G	H	J	T
0805	1.55 ±0.20	2.35 ±0.20	8.00 ±0.20	3.50 ±0.05	1.75 ±0.10	4.00 ±0.10	2.00 ±0.10	4.00 ±0.10	1.50-0/ +0.10	低于 1.50
1206	1.95 ±0.20	3.60 ±0.20	8.00 ±0.20	3.50 ±0.05	1.75 ±0.10	4.00 ±0.10	2.00 ±0.10	4.00 ±0.10	1.50-0/ +0.10	低于 1.85
1210	2.70 ±0.10	3.42 ±0.10	8.00 ±0.10	3.50 ±0.05	1.75 ±0.10	4.00 ±0.10	2.00 ±0.05	4.00 ±0.10	1.50-0/ +0.10	低于 3.2
1808	2.20 ±0.10	4.95 ±0.10	12.00 ±0.10	5.50 ±0.05	1.75 ±0.10	4.00 ±0.10	2.00 ±0.05	4.00 ±0.10	1.50-0/ +0.10	低于 3.0
1812	3.66 ±0.10	4.95 ±0.10	12.00 ±0.10	5.50 ±0.05	1.75 ±0.10	8.00 ±0.10	2.00 ±0.05	4.00 ±0.10	1.50-0/ +0.10	低于 4.0

Note:The place with "*" means where needs exactly dimensions.

- Structure of leader part and end part of the carrier paper

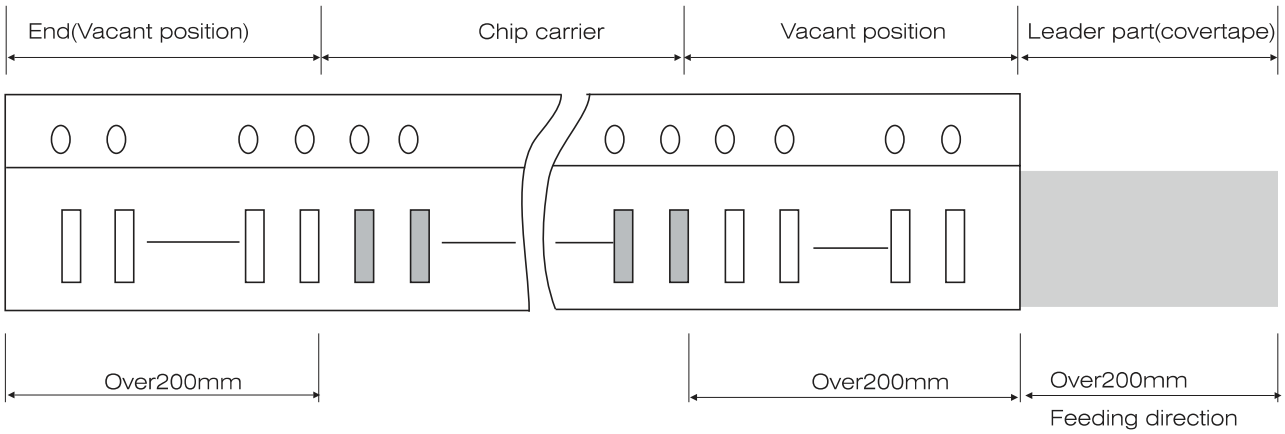

- Reel Dimensions (unit:mm)

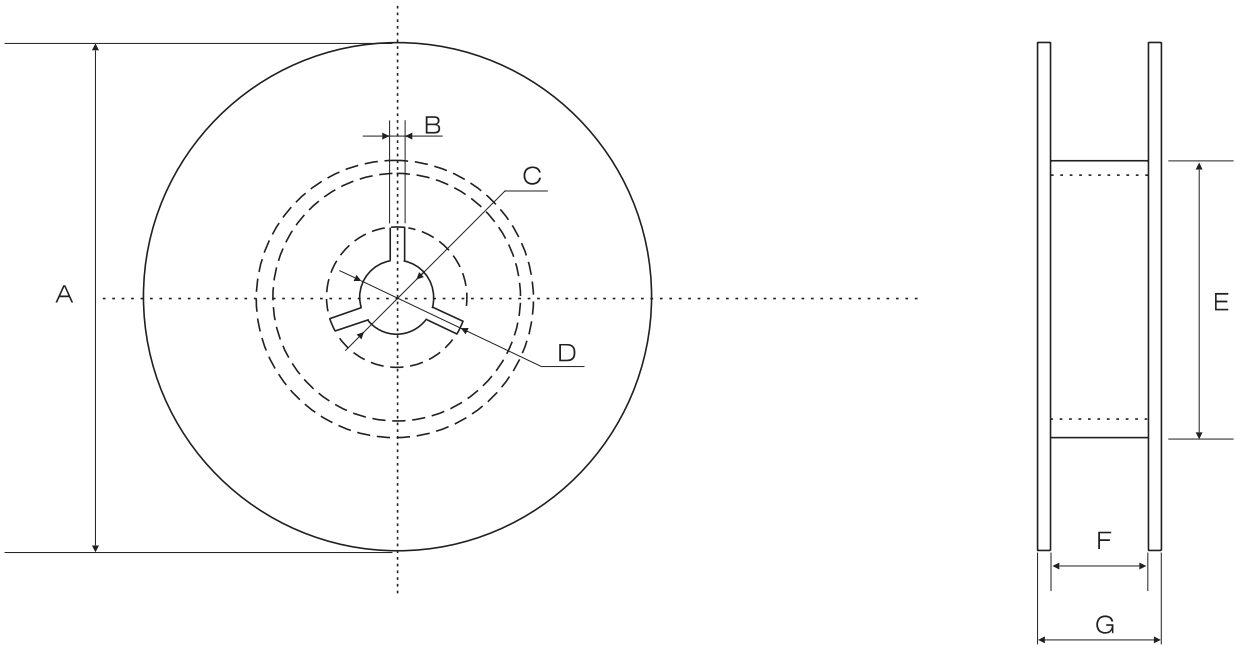

- Code

A	B	C	D	E	F	G
Φ178.00 ± 2.00	3.00	Φ13.00 ± 0.50	Φ21.00 ± 0.80	Φ50.00 or max	10.00 ± 1.50	12MAX
Φ330.00 ± 2.00	3.00	Φ13.00 ± 0.50	Φ21.00 ± 0.80	Φ50.00 or max	10.00 ± 1.50	12MAX

■ TAPING SPECIFICATION

- Top cover tape peeling strength

(A)Paper Taping (b)Cover tape peeling direction

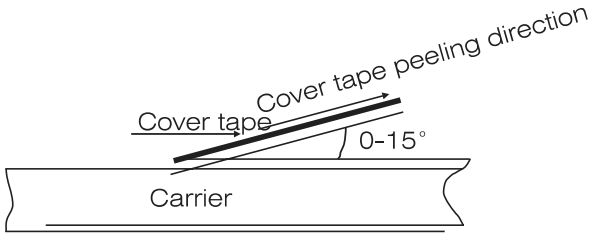

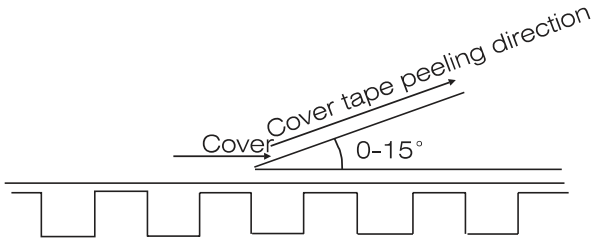

Standard：0.1N<peeling forc<0.7N；
No paper dirty remains on the scotch when peeling，and no sticks to top and bottom cover tape.

- Bulk Case Package

Symbol	A	B	T	C	D	E
Dimension	6.80±0.10	8.80±1.00	12.00±0.10	15.00+0. 10/-1	2.00±0/-0.10	4.70±0.10
Symol	F	W	G	H	L	I
Dimension	31.50+0.20/-0	36.00+0/-0.2	19.00±0.35	7.00±0.35	110.00±0.70	5.00±0.35

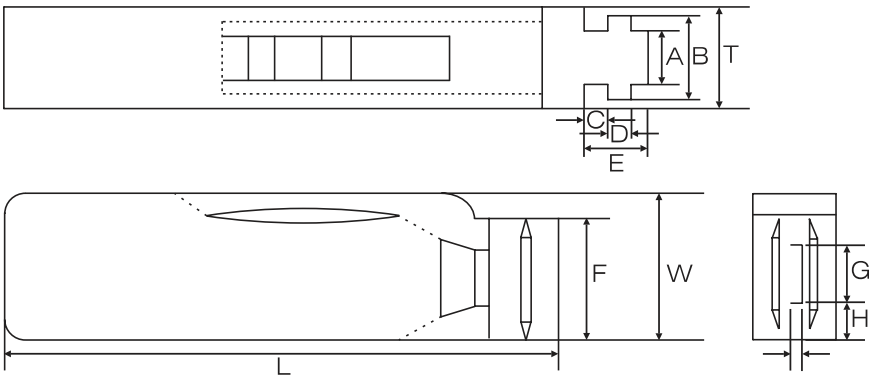

- Pack Quantity

Size	Pakaging method and quantity			
	Paper tape taping	Plastistic embossed taping	Bulk plastic box packaging	Normal bulk packaging
0402	10000		20000	5000
0603	4000		15000	5000
0805	4000	3000	10000	5000
1206	4000	T≤1.35mm 3000 T>1.35mm 2000	5000	5000
1210		T≤1.80mm 2000 T>1.80mm 1000		2000
1808		2000		2000
1812		T≤1.85mm 1000 T>1.85mm 500		2000
2225		500		500
3035		500		

Note：We can choose packing style and quantity can be according to the customer's requirement.